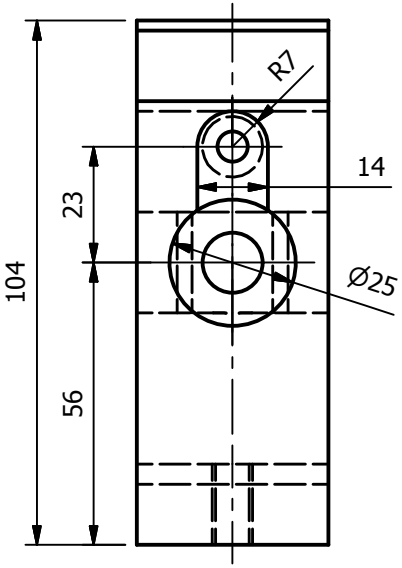

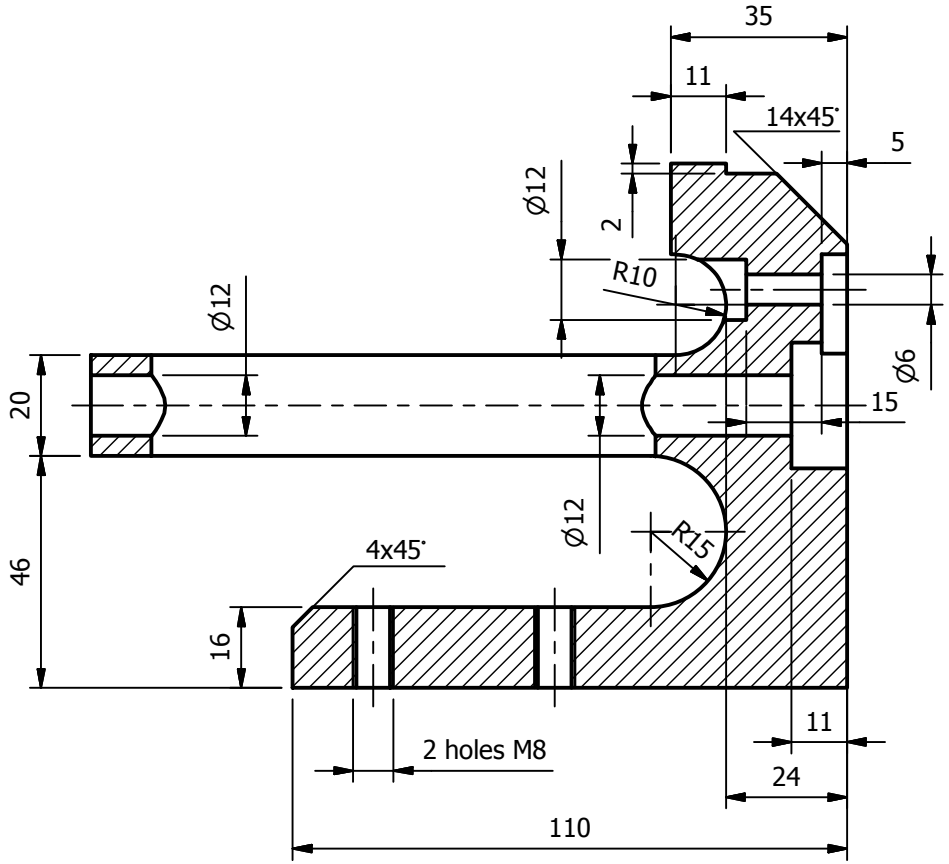

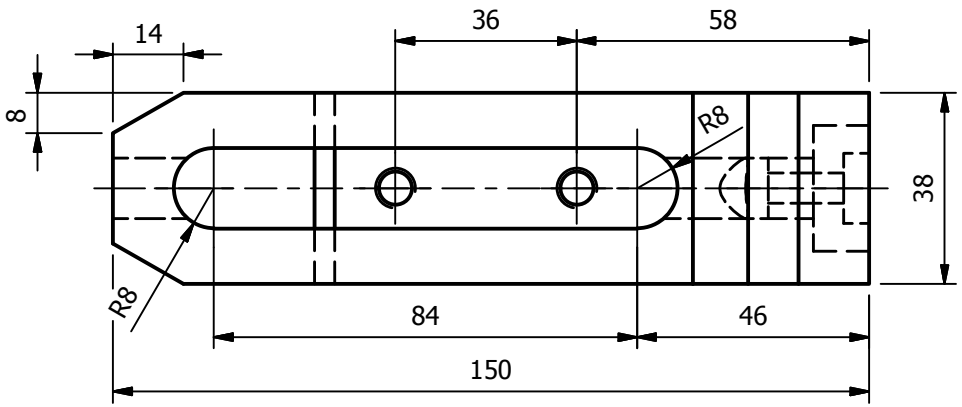

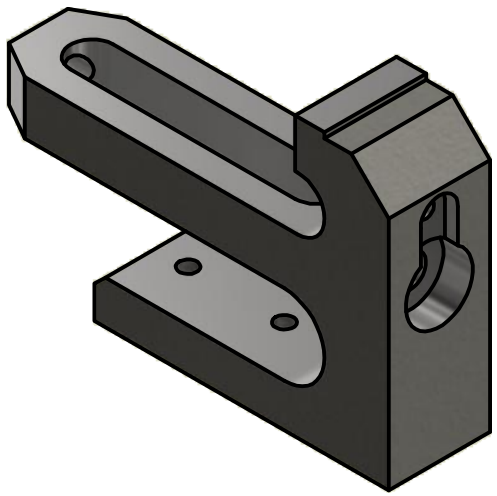

203510.815 mm^3